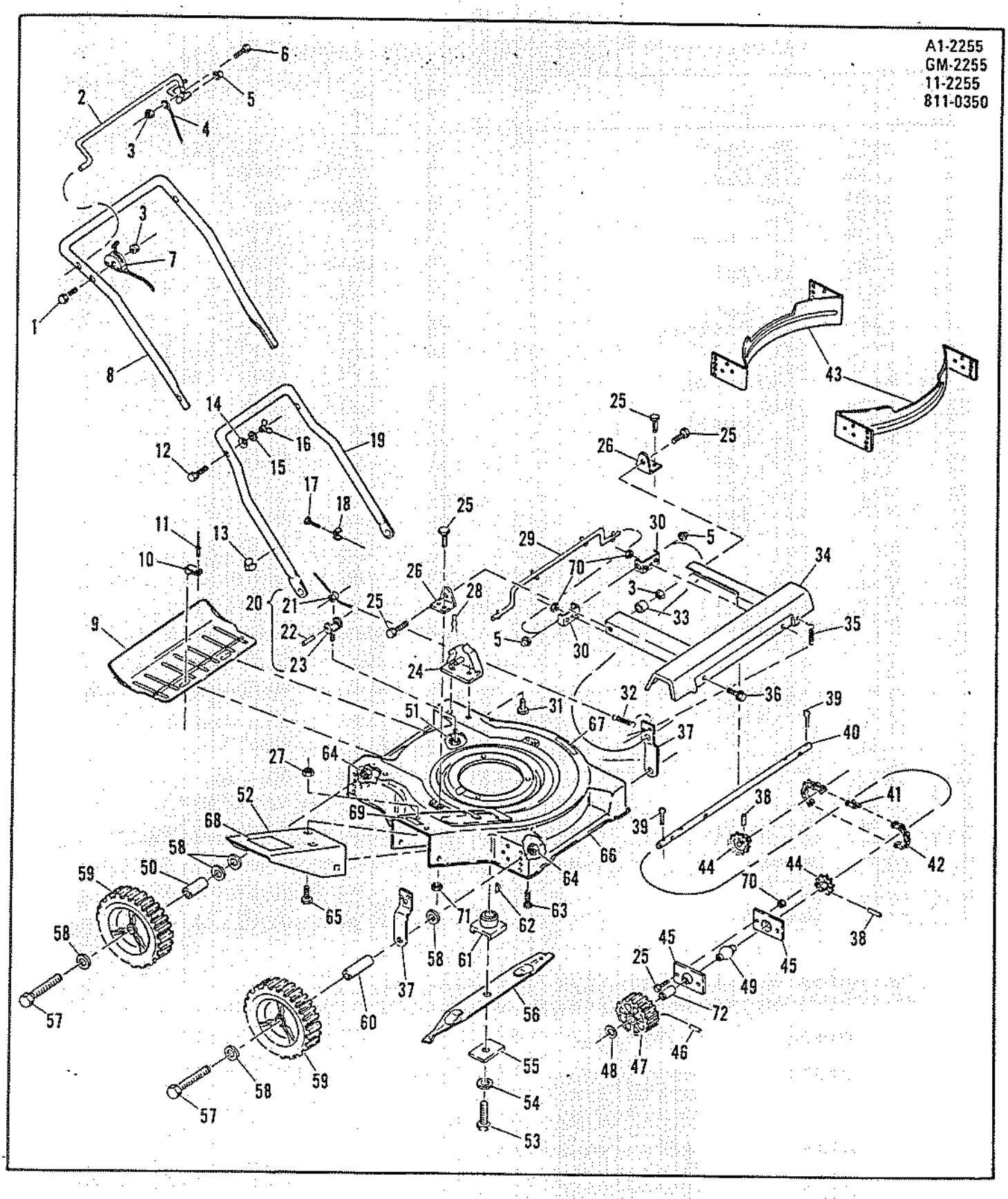
A1-2255
GM-2255
11-2255
811-0350

PARTS LIST FOR MODELS A1-2255, GM-2255, 11-2255 & 811-0350

Ref. No.	Part No.	Description
1	18-18	Bolt – 1/4-20 x 1-1/2
2	4-221	Handle Weldment
3	19-117	Nut – Hex 1/4-20 Locking
4	47-580	Cable – Drive
5	19-208	Nut – 3/8 Push
6	18-3	Bolt – 1/4-20 x 3/4
7	8-91	Control – Throttle
8	4-222	Handle – Folding
9	10-234	Trailguard
10	17-143	Clip
11	62-34	Rivet
12	18-131	Bolt – Handle
13	17-2	Clamp – Cable
14	21-191	Washer – Curved
15	21-197	Washer – Lock
16	19-183	Nut – Wing
17	20-195	Screw – Casing
18	17-80	Clamp – Casing
19	6-62	Yoke
20	105-88	Clevis Assembly
21	105-82	Pulley – Cable
22	28-110	Pin – Roll
23	6-56	Clevis
24	7-364	Bracket – Yoke, L.H.
	7-365	Bracket – Yoke, R.H.
25	18-1	Bolt – 1/4-20 x 5/8
26	7-245	Bracket – Pinion Tube
27	19-1	Nut – 10-24 Hex Keps
28	17-107	Clip – Yoke
29	82-160	Rod – Engagement
30	7-433	Bracket – Hinge
31	20-186	Bolt – 1/4-20 x 1/2
32	76-134	Spring – Lever Arm
33	26-150	Spacer – Pivot
34	10-228	Cover – Pinion
35	76-133	Spring – Extension
36	20-329	Screw – 1/4-20 x 5/8
37	79-185	Arm – Actuated
38	28-50	Pin – Roll 3/16 x 1
39	28-26	Pin – Cotter 1/8 x 1
40	102-163	Shaft – Pinion
41	110-39	Master Link
42	110-48	Chain
43	*22-149	Baffle
44	135-24	Sprocket – Drive
45	22-145	Plate – Bearing
46	28-23	Pin – Roll
47	101-84	Pinion – Drive
48	21-21	Washer – Flat
49	11-145	Bearing
50	26-146	Spacer – Wheel
51	19-3	Nut – 5/16
52	130-25	Extension – Chute
53	18-36	Bolt – Blade
54	21-18	Washer – Blade
55	26-97	Spacer – Adapter
56	1-111	Blade – 22"
57	20-313	Bolt – 3/8-16 x 2-1/4
58	21-33	Washer – 3/8 Flat
59	3-168	Wheel – 8"
60	26-147	Spacer – Wheel
61	15-21	Adapter – Blade
62	16-1	Key
63	20-156	Bolt – Engine
64	19-146	Nut – Axle
65	18-127	Bolt – Carriage
66	2-234	Housing
67	54-326	Decal – "Place Foot...."
68	54-390	Decal – "Chute"
69	54-387	Decal – "Caution...."
70	19-2	Nut – 1/4-20 Keps
71	19-139	Nut – 1/4-20 Flange
72	26-154	Spacer

OPTIONAL ACCESSORY

30-0210	Grass Catcher
30-0260	Replacement Bag

*Models A1-2255, GM-2255 & 11-2255 use front baffle only.