A1-2254
B1-2254
10ASP227
11-2254

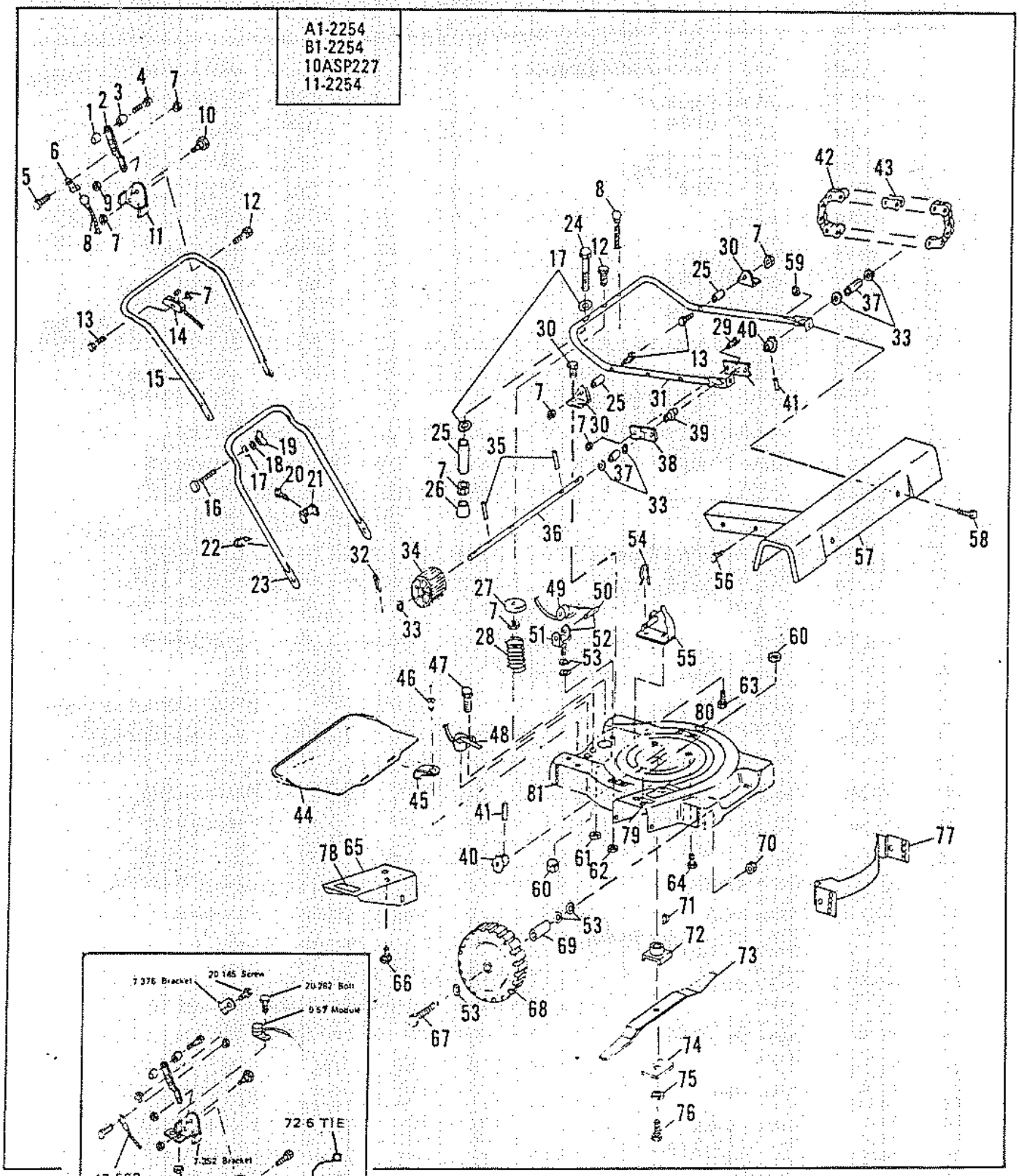

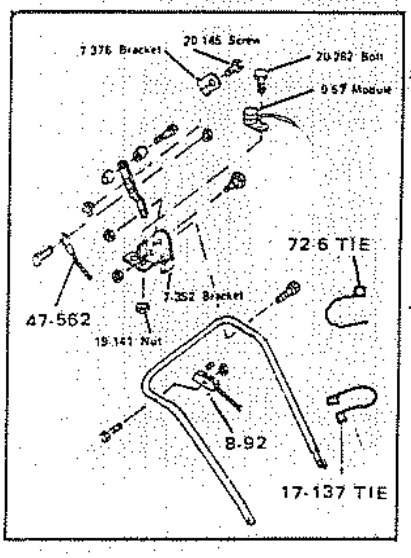

(REVISED JANUARY 1978)

PARTS LIST FOR MODELS A1-2254, B1-2254, 10ASP227 & 11-2254

Ref. No.	Part No.	Description
1	46-41	Knob – Tapped
2	108-68	Lever – Shift
3	46-40	Knob – Plain
4	20-280	Screw
5	20-145	Screw
6	28-118	Clevis – Lanyard
7	19-117	Nut
8	47-572	Cable – Shift
9	19-111	Nut
10	18-60	Bolt – Shoulder
11	7-398	Bracket – Shift Lever
12	18-42	Bolt
13	18-44	Bolt
14	8-91	Control – Throttle
15	4-175	Handle
16	18-131	Bolt – Curved Hd.
17	21-191	Washer – Curved
18	21-197	Washer – Lock
19	19-183	Nut – Wing
20	17-80	Clamp – Casing
21	20-195	Screw – Casing
22	17-2	Clamp – Cable
23	6-62	Yoke
24	18-133	Bolt
25	26-115	Spacer
26	137-15	Cap – Protective
27	80-11	Cup – Spring
28	76-114	Spring
29	18-1	Bolt
30	7-245	Bracket
31	25-91	Tube – Pinion
32	28-26	Pin – Cotter
33	21-146	Washer – Flat
34	101-84	Pinion
35	28-23	Pin – Roll
36	102-138	Shaft
37	26-107	Spacer
38	12-165	Plate – Bearing
39	11-145	Bearing
40	135-24	Sprocket
41	28-50	Pin – Roll
42	110-48	Chain
43	110-39	Master Link
44	10-207	Trailing Guard
45	17-143	Bracket
46	62-34	Pop Rivet
47	20-282	Bolt
48	*9-61	Module
49	105-82	Pulley
50	28-110	Roll Pin
51	6-56	Clevis
52	105-88	Pulley Assy.
53	21-33	Washer
54	17-107	Clip – Yoke
55	7-365	Bracket – Yoke R.H.
	7-364	Bracket – Yoke L.H.
56	20-287	Screw
57	10-202	Cover
58	18-3	Screw
59	19-2	Nut – Keps
60	19-1	Nut – Keps
61	19-3	Nut
62	19-139	Nut – Flange
63	20-305	Bolt
64	20-156	Bolt – Engine
65	130-25	Chute Extension
66	18-127	Bolt – Carriage
67	20-313	Bolt – Axle
68	3-168	Wheel – 8" Plastic
69	26-146	Spacer – Wheel
70	19-146	Nut – Flange
71	16-1	Key – Engine Shaft
72	15-21	Adapter – Blade
73	1-111	Blade
74	26-97	Spacer – Blade
75	21-18	Washer
76	18-36	Bolt
77	22-114	Baffle – Front
78	54-390	Decal – "Caution"
79	54-387	Decal – "Chute...."
80	54-326	Decal "Place Foot Here...."
81	2-202	Housing

OPTIONAL ACCESSORY

30-0210	Grass Catcher
30-0260	Replacement Bag for 30-0210 Catcher

*Following models have safety start module on handle control instead of mower housing. See inset illustration page 1-316 for correct part numbers:

Model No.	Serial Numbers
10ASP227	250002 thru 250711
	262001 thru 262051
	269803 thru 270000
	274001 thru 275000
11-2254	183001 thru 183360
	197144 thru 197294
A1-2254	269601 thru 269802
B1-2254	250712 thru 250813

(REVISED JANUARY 1978)