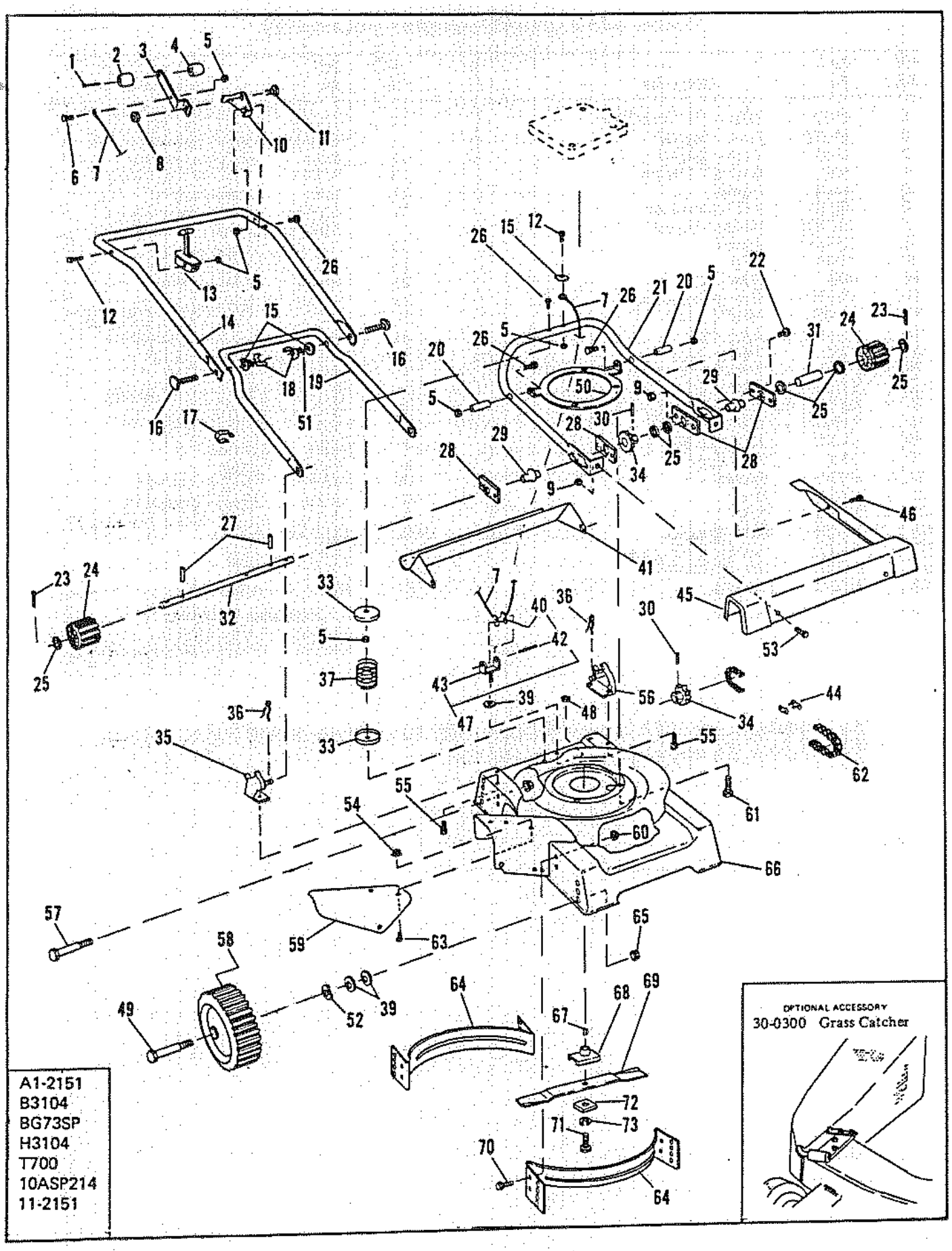
OPTIONAL ACCESSORY
30-0300 Grass Catcher
A1-2151
B3104
BG73SP
H3104
T700
10ASP214
11-2151

PARTS LIST FOR MODELS 11-2151, 10ASP214, BG73SP, B3104, H3104, T700 & A1-2151

Ref. No.	Part No.	Description	Qty.
1	20-280	Screw — Shift Lever	1
2	46-40	Knob — Plain	1
3	108-68	Lever — Shift	1
4	46-41	Knob — Thread	1
5	19-117	Nut	8
6	20-145	Screw	1
7	47-544	Cable	1
8	19-111	Nut	1
9	19-2	Nut — Keps	6
10	7-352	Bracket — Shift Lever	1
11	18-60	Bolt — Shoulder	1
12	18-18	Bolt	2
13	8-91	Control — Throttle	1
14	4-175	Handle	1
15	21-191	Washer — Curved	3
16	18-131	Bolt — Curved Hd	2
17	17-2	Clamp — Cable	1
18	19-183	Nut — Wing	2
19	6-63	Yoke	1
20	26-115	Spacer — Pivot	2
21	25-88	Tube — Pinion	1
22	18-1	Bolt — Bearing Plate	4
23	28-90	Pin — Cotter	2
24	101-84	Pinion	2
25	21-120	Washer	6
26	18-42	Bolt	5
27	28-23	Pin — Roll	2
28	12-165	Plate — Bearing	4
29	11-145	Bearing	2
30	28-50	Pin — Roll	2
31	26-107	Spacer — Pinion, L.H. (Drive Side)	1
32	102-137	Shaft	1
33	80-11	Cup — Spring	2
34	135-24	Sprocket	2
35	7-365	Bracket — Yoke, R.H.	1
36	17-107	Clip — Yoke	2
37	76-107	Spring	1
39	21-33	Washer	9
40	105-82	Pulley — Control Cable	1
41	10-188	Guard — Trailing	1
42	28-110	Pin — Roll	1
43	6-56	Clevis	1
44	110-39	Master Link	1
45	10-196	Cover — Chain	1
46	20-287	Screw	2
47	105-83	Pulley Assy	1
48	19-3	Nut	1
49	18-116	Bolt — Axle	2
50	26-109	Spacer — Engine	1
51	21-197	Washer	2
52	21-113	Washer — Curved	4
53	18-3	Screw	2
54	19-1	Nut — Keps	3
55	20-288	Screw	4
56	7-364	Bracket — Yoke, L.H.	1
57	20-74	Bolt — Axle	2
58	3-168	Wheel Assy	4
59	130-20	Chute Extension	1
60	19-147	Nut	4
61	18-130	Bolt — Hex Hd	3
62	110-46	Chain	1
63	18-127	Bolt — Carriage	3
64	22-74	Baffle	2
65	19-146	Nut	4
66	2-186	Housing	1
67	16-1	Key — Engine Shaft	1
68	15-21	Adapter — Blade	1
69	1-110	Blade	1
70	20-240	Screw	4
71	18-36	Bolt	1
72	26-97	Spacer — Blade Adapter	1
73	21-18	Washer — Lock	1

OPTIONAL ACCESSORY

30-0100 Grass Catcher