10-1930
10-2130

WHEN ORDERING PARTS, USE
PART NO., NOT REFERENCE NO.*

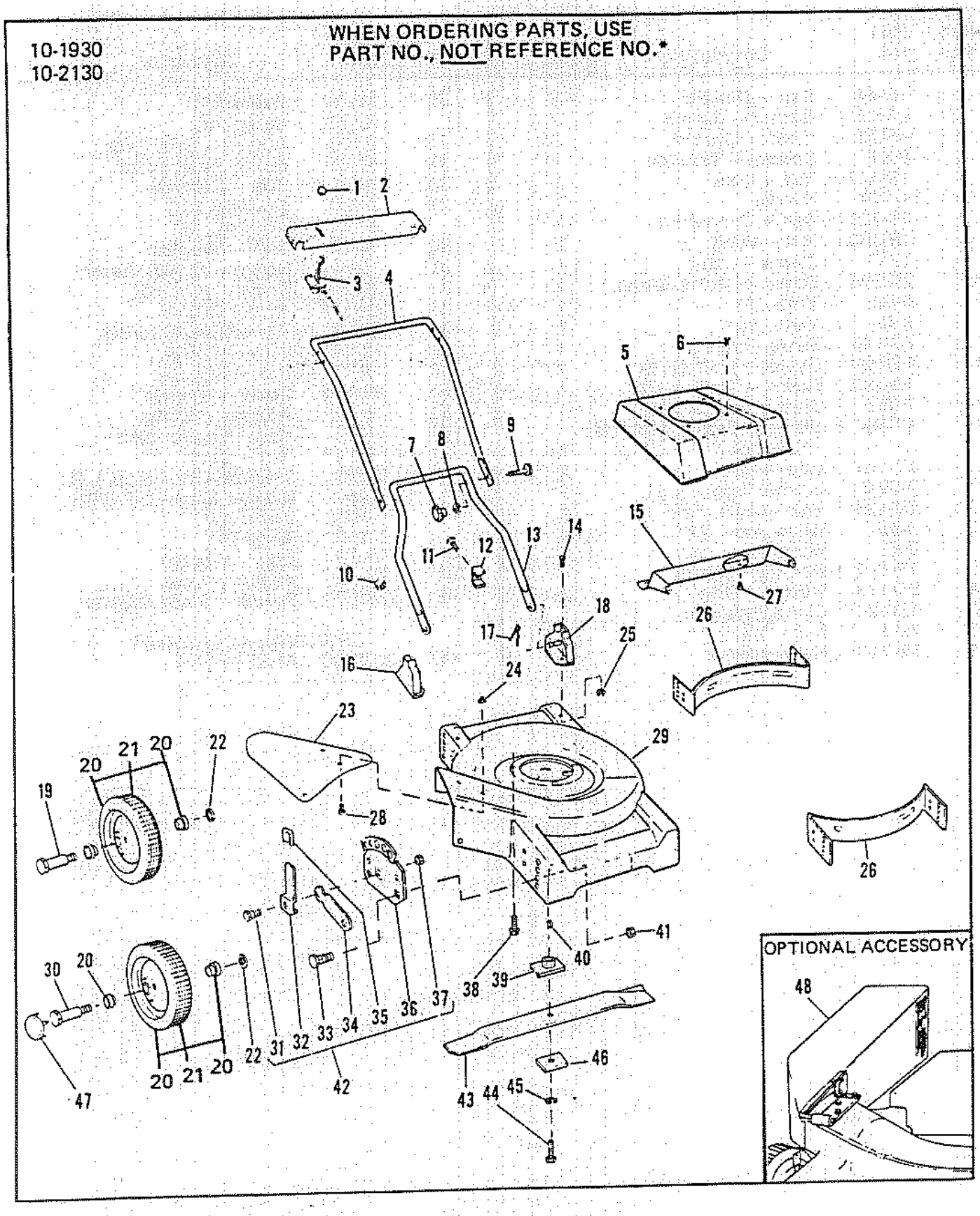

PARTS LIST FOR MODELS 10-1930 & 10-2130

Ref. No.	Part No.	Description	Qty.
1	46-43	Knob — Control	1
2	43-331	Panel — Control	1
3	8-57	Control — Throttle	1
4	4-176	Handle	1
5	130-8	Shroud	1
6	20-279	Screw	4
7	46-44	Knob	2
8	21-191	Washer — Curved	2
9	18-131	Bolt — Curved Hd	2
10	17-2	Clamp — Cable	1
11	21-195	Screw — Casing Clamp	1
12	17-80	Clamp — Casing	1
13	6-62	Yoke (21")	1
	6-61	Yoke (19")	1
14	20-145	Screw	4
15	10-187	Guard — Trailing (21")	1
	10-189	Guard — Trailing (19")	1
16	7-295	Bracket Assy — Yoke, R.H.	1
17	17-107	Clip — Yoke	2
18	7-294	Bracket Assy — Yoke, L.H.	1
19	18-125	Bolt — Axle	2
20	11-5	Bearing — Ball	8
21	3-164	Wheel Assy (21")	4
	3-163	Wheel Assy (19")	4
22	21-113	Washer — Cup	4
23	130-20	Chute — Extension	1
24	19-1	Nut — Keps	3
25	19-143	Nut — Washer	4
26	22-73	Baffle (19")	2
	22-74	Baffle (21")	2
27	124-6	Button — Drag Plate	2
28	18-127	Bolt — Carriage	3
29	2-130	Housing (21")	1
	2-131	Housing (19")	1
30	18-32	Bolt — Axle	2
31	18-71	Bolt — Shoulder	4
32	76-71	Spring — Q.W.A. Lever	4
33	20-240	Screw — Hex Hd	5
34	79-121	Arm — Q.W.A.	4
35	137-9	Tip — Q.W.A. Spring	4
36	12-145	Plate — Q.W.A.	4
37	19-111	Nut — Hex Jam	4
38	20-156	Screw — Hex Hd (Engine)	3
39	15-21	Adapter — Blade	1
40	16-1	Key — Engine Shaft	1
41	19-147	Nut — Lock	8
42	7-240	Bracket Assy — R.F., L.R.	2
	7-264	Bracket Assy — L.F., R.R.	2
43	1-108	Blade (19")	1
	1-110	Blade (21")	1
44	18-36	Bolt — Hex Hd	1
45	21-18	Washer — Lock	1
46	26-97	Spacer — Blade Adapter	1
47	89-34	Hub Cap	4

OPTIONAL ACCESSORY

48	30-0100	Grass Catcher	